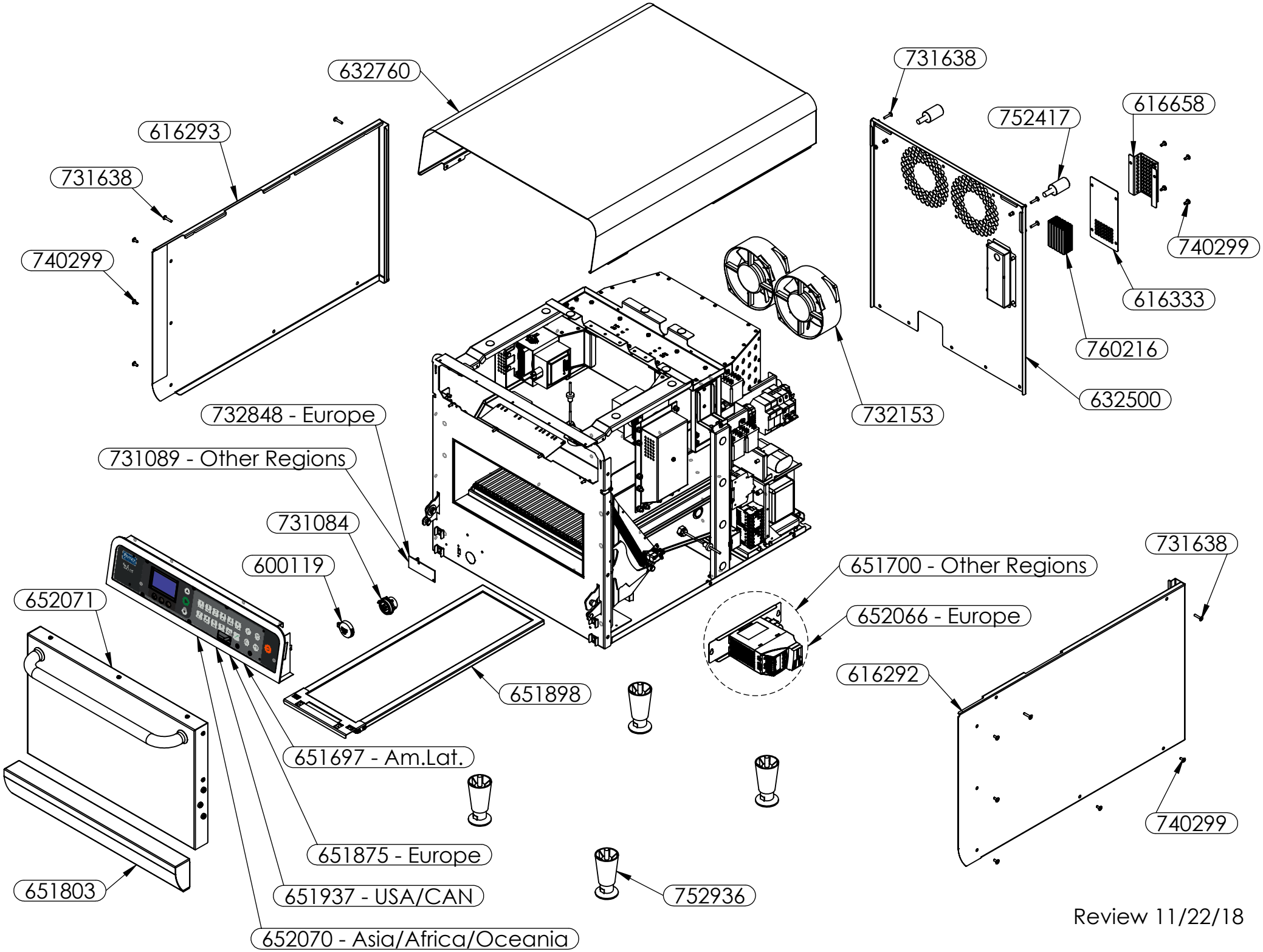

Review 11/22/18

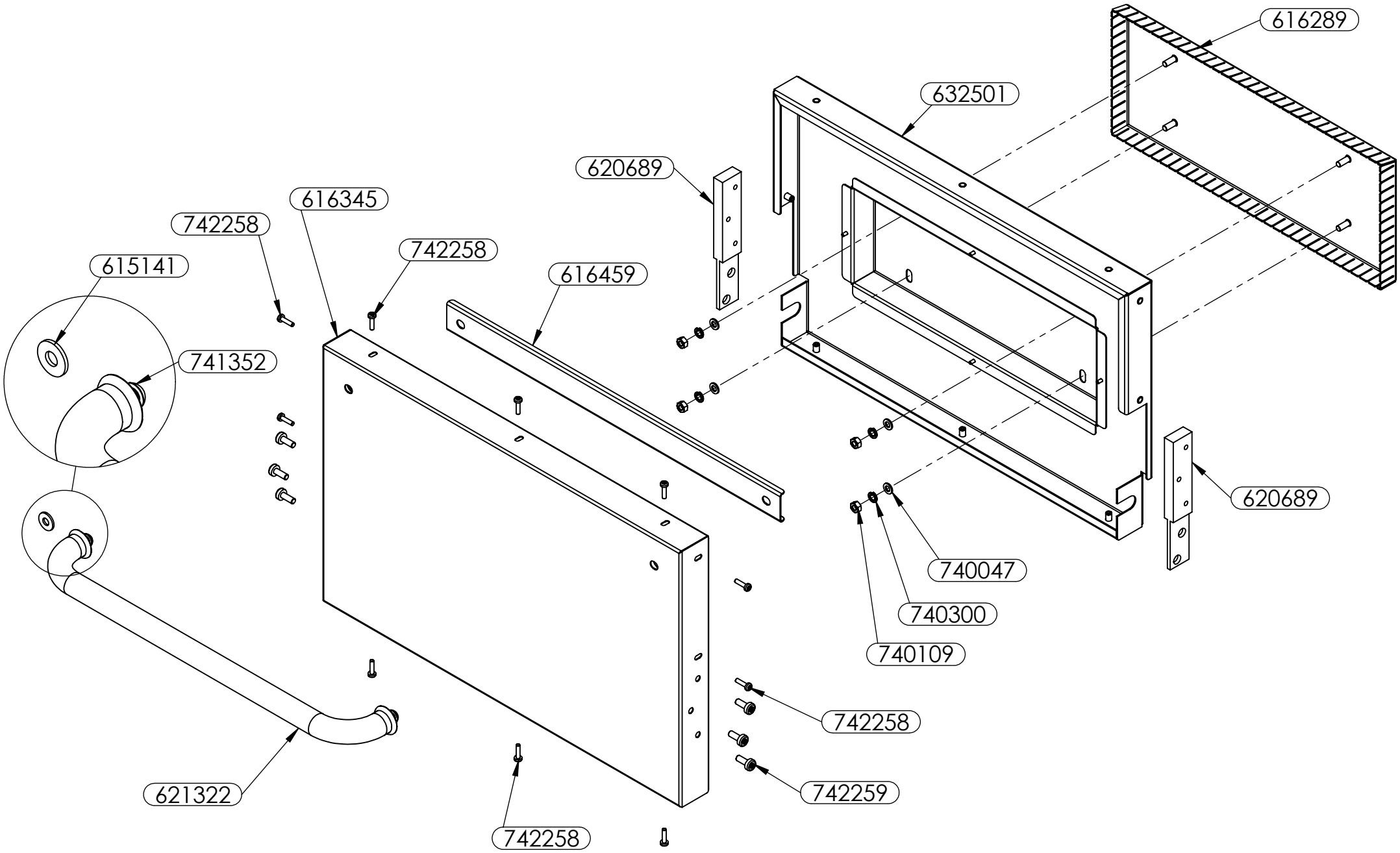

Review 11/22/18

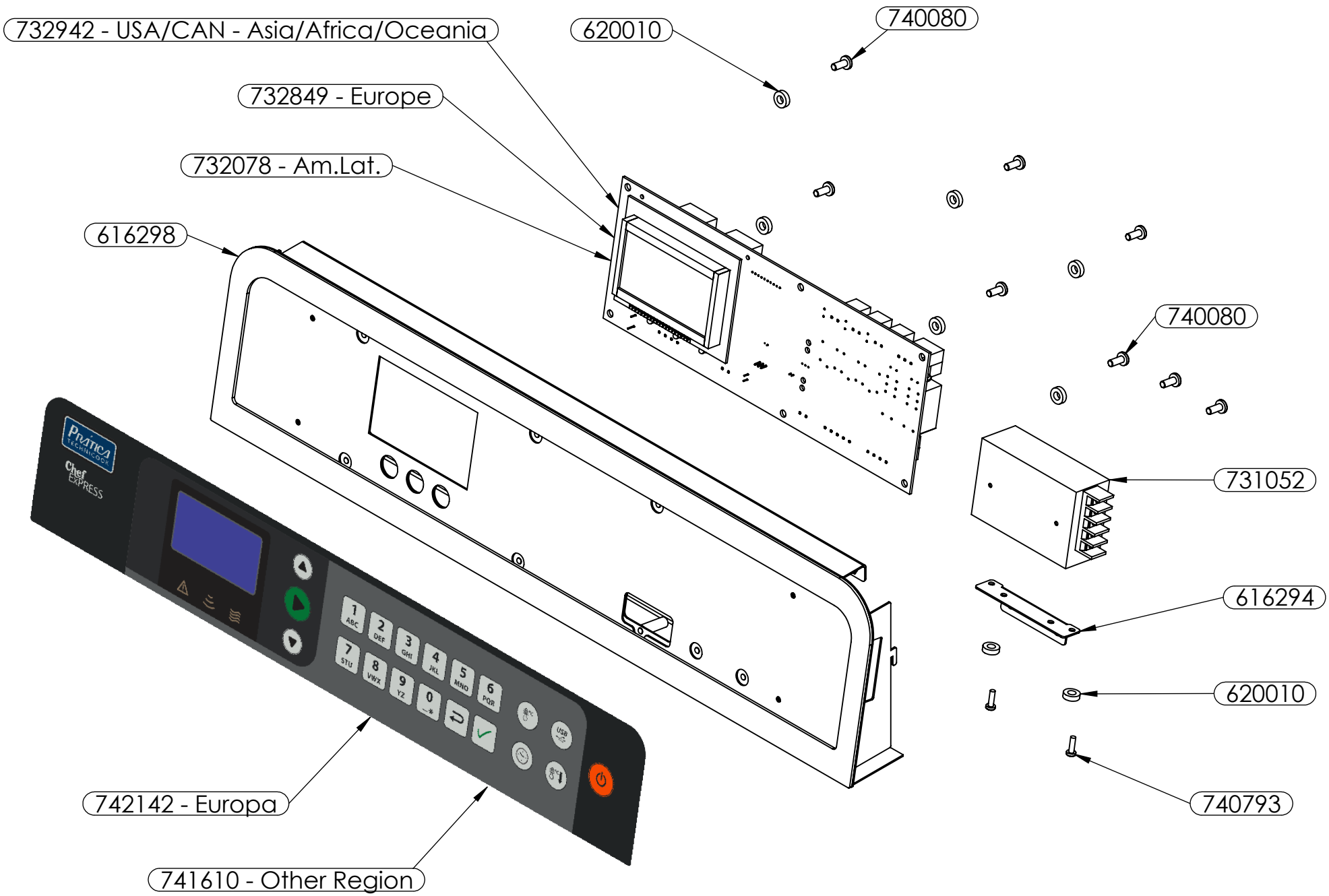

Review 11/22/18

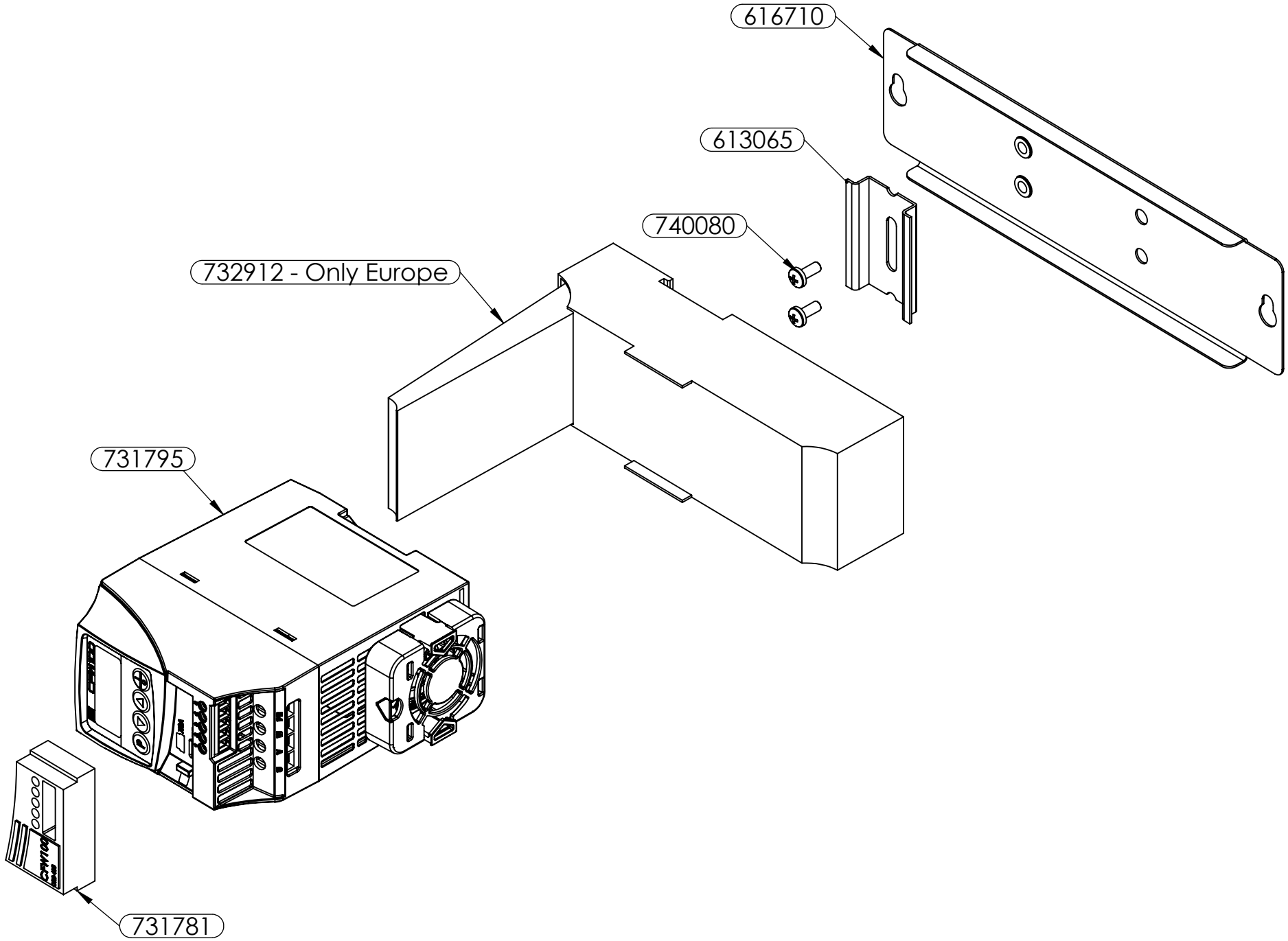

Review 11/24/18

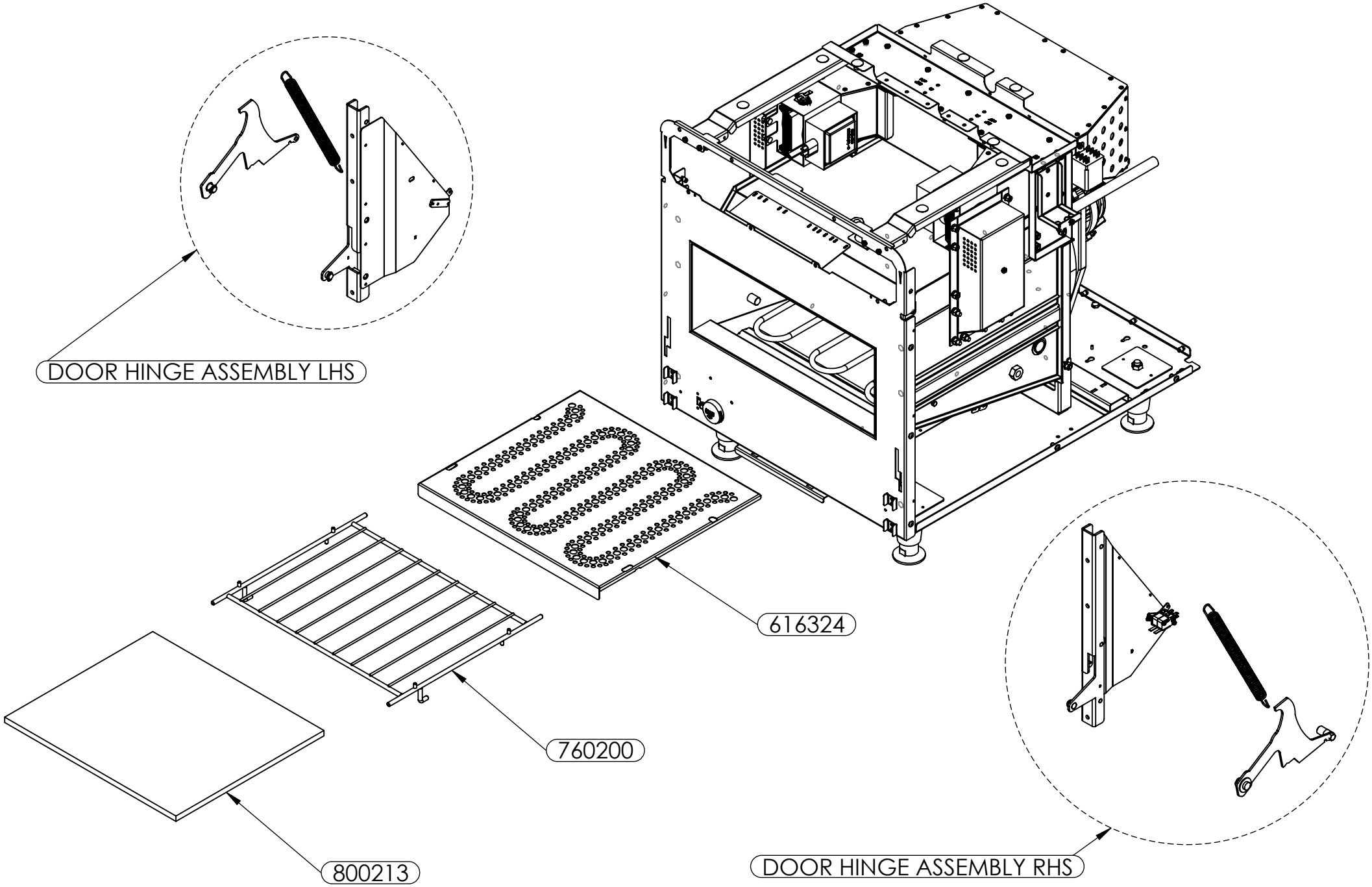

Review 11/22/18

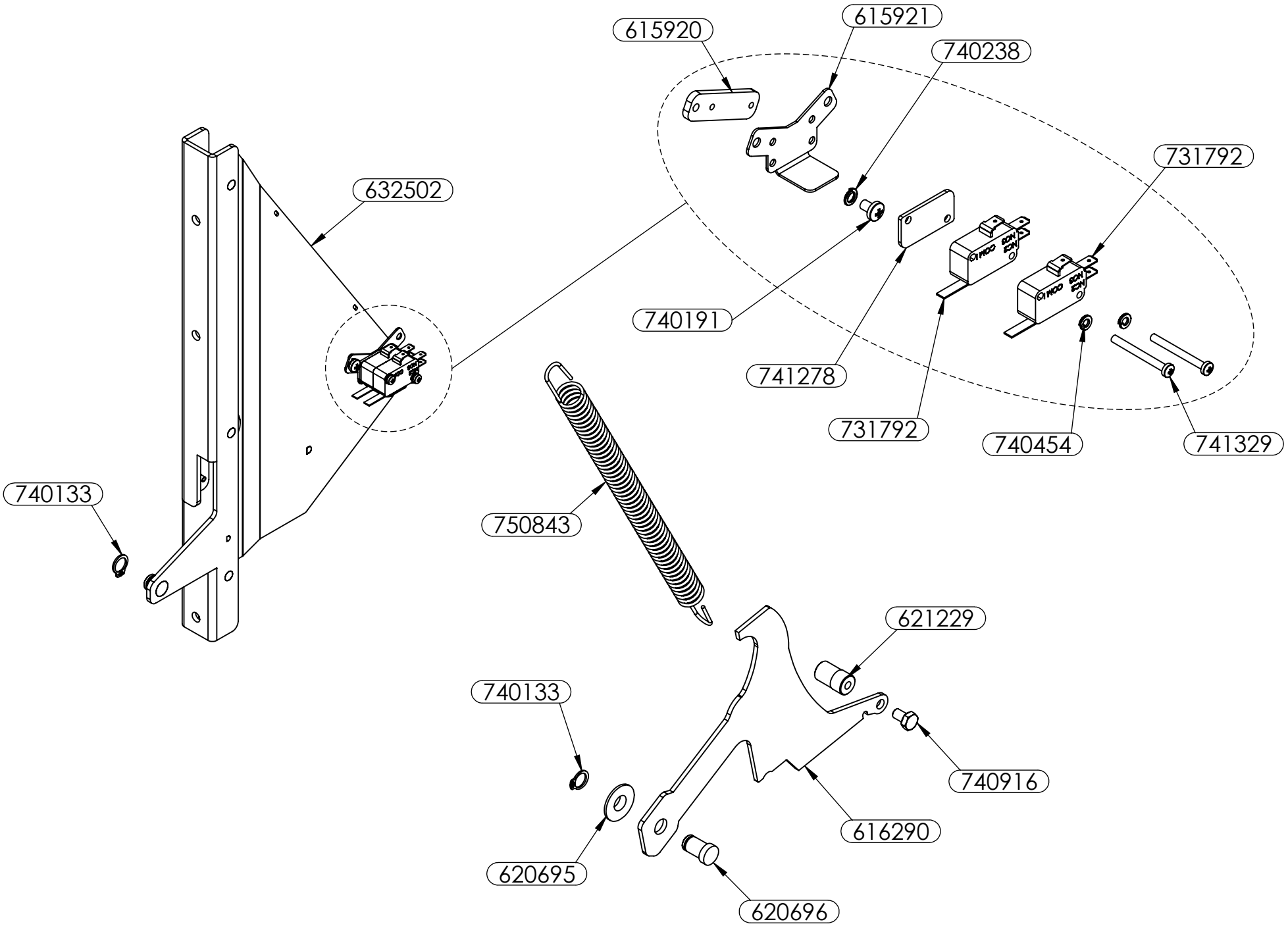

Review 11/22/18

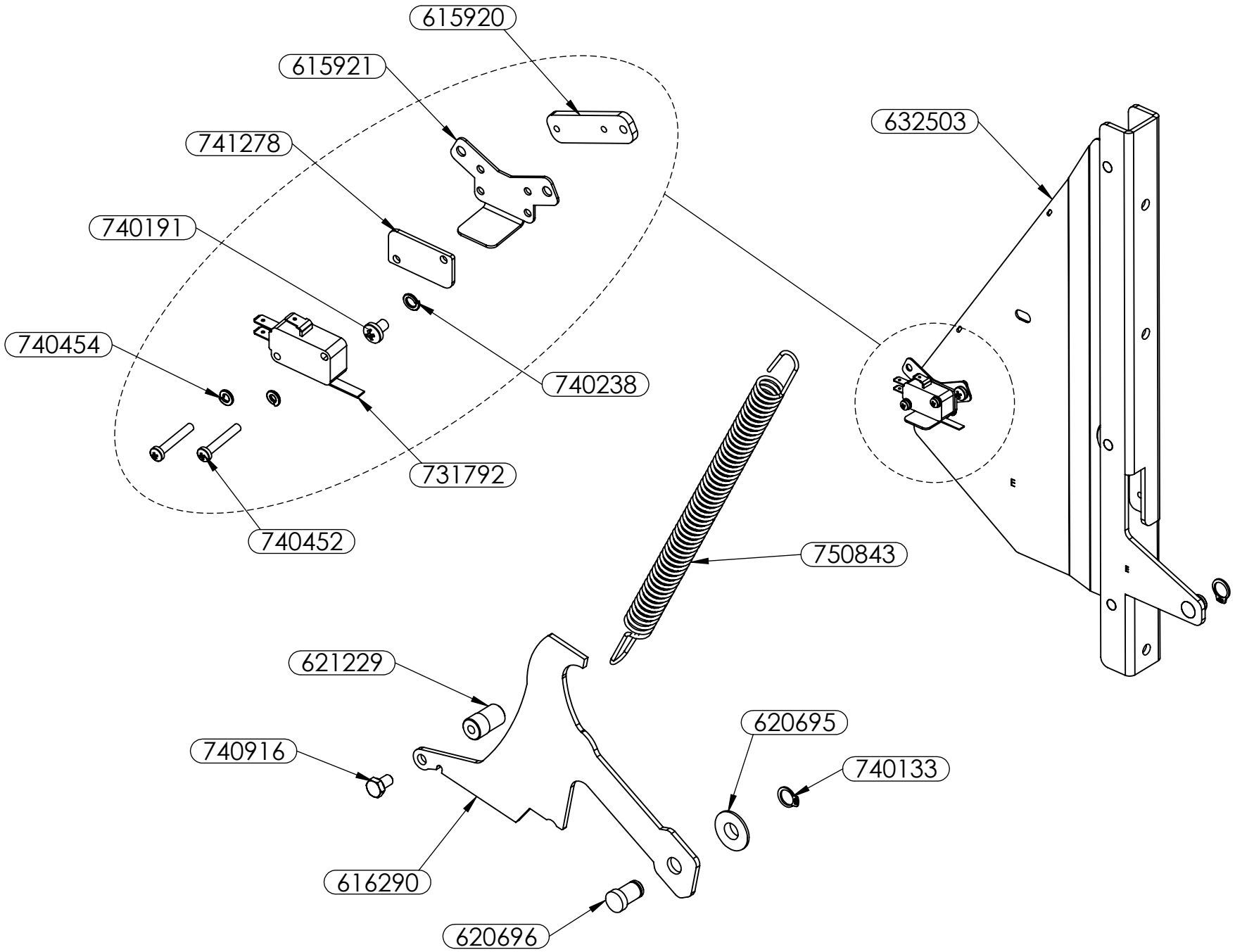

Review 11/22/18

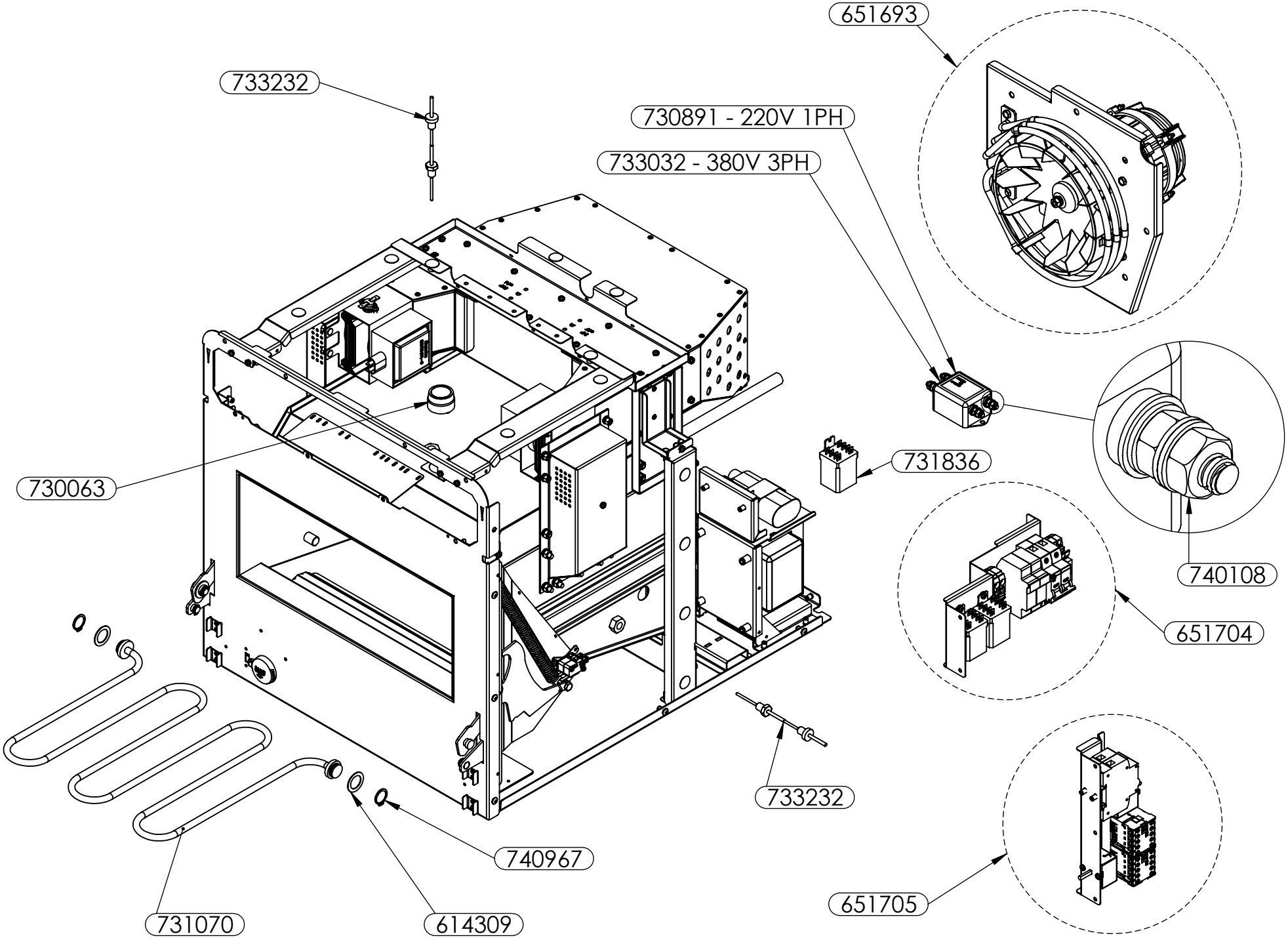

Review 11/22/18

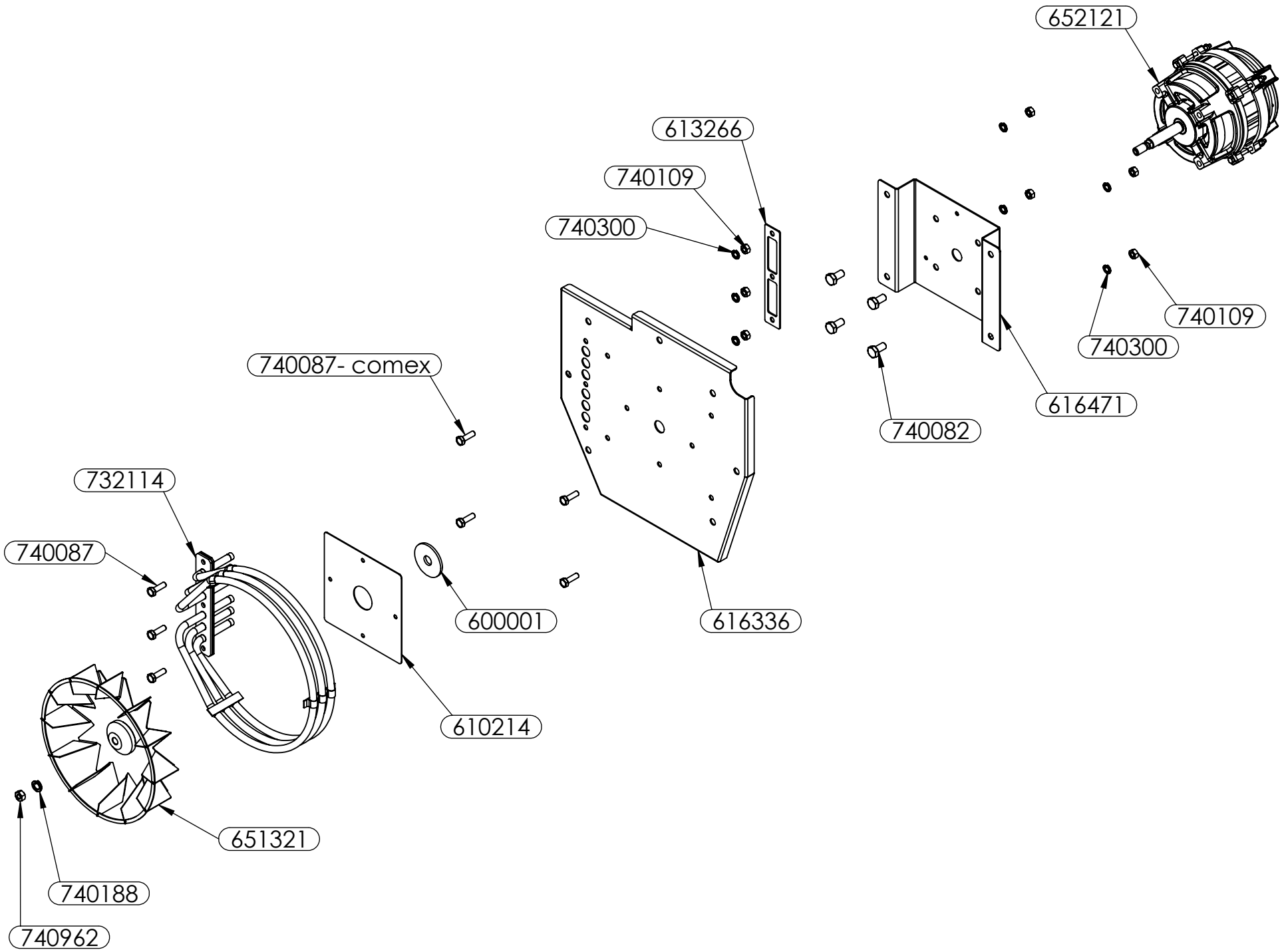

Review 11/22/18

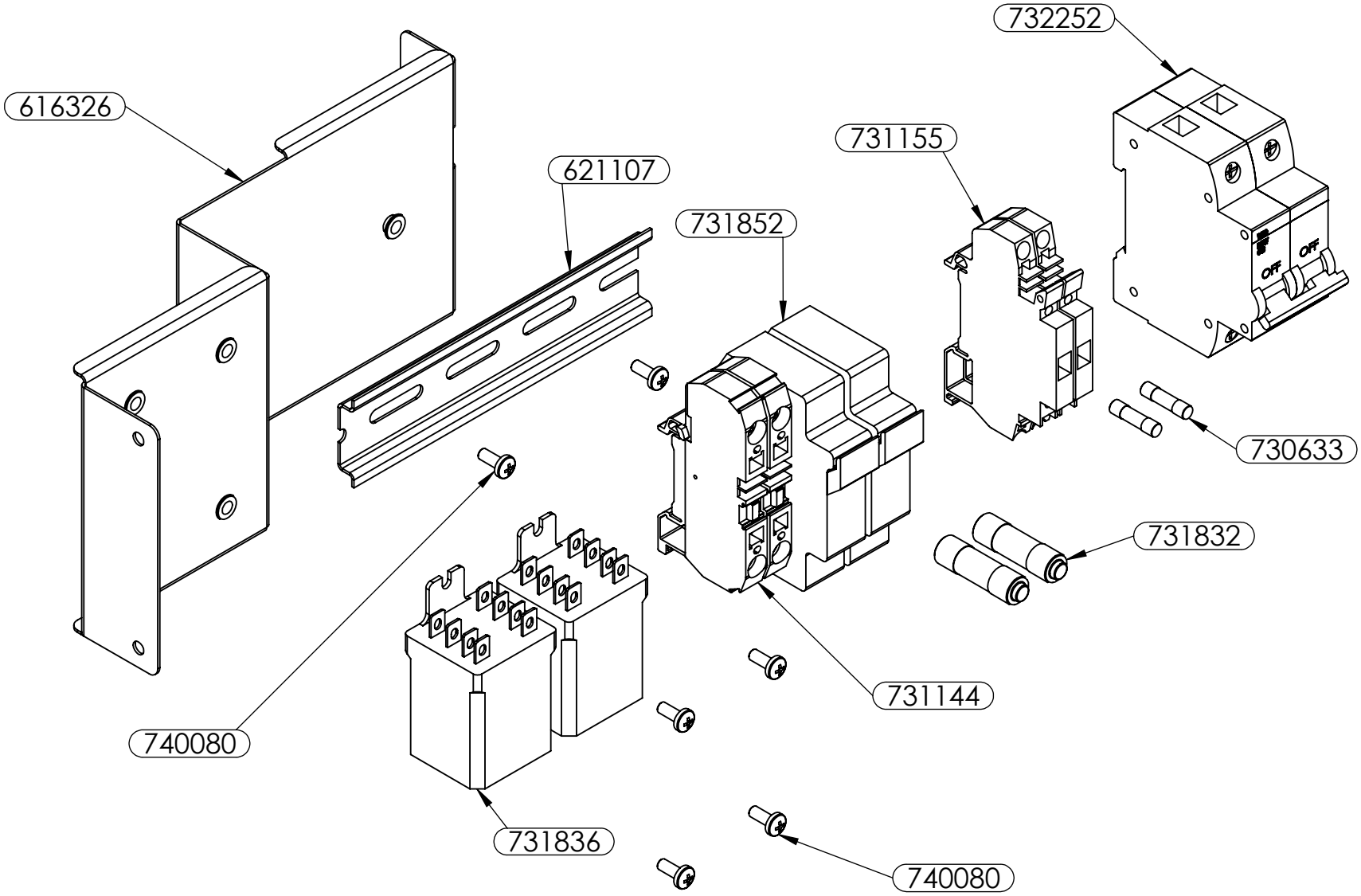

Review 11/22/18

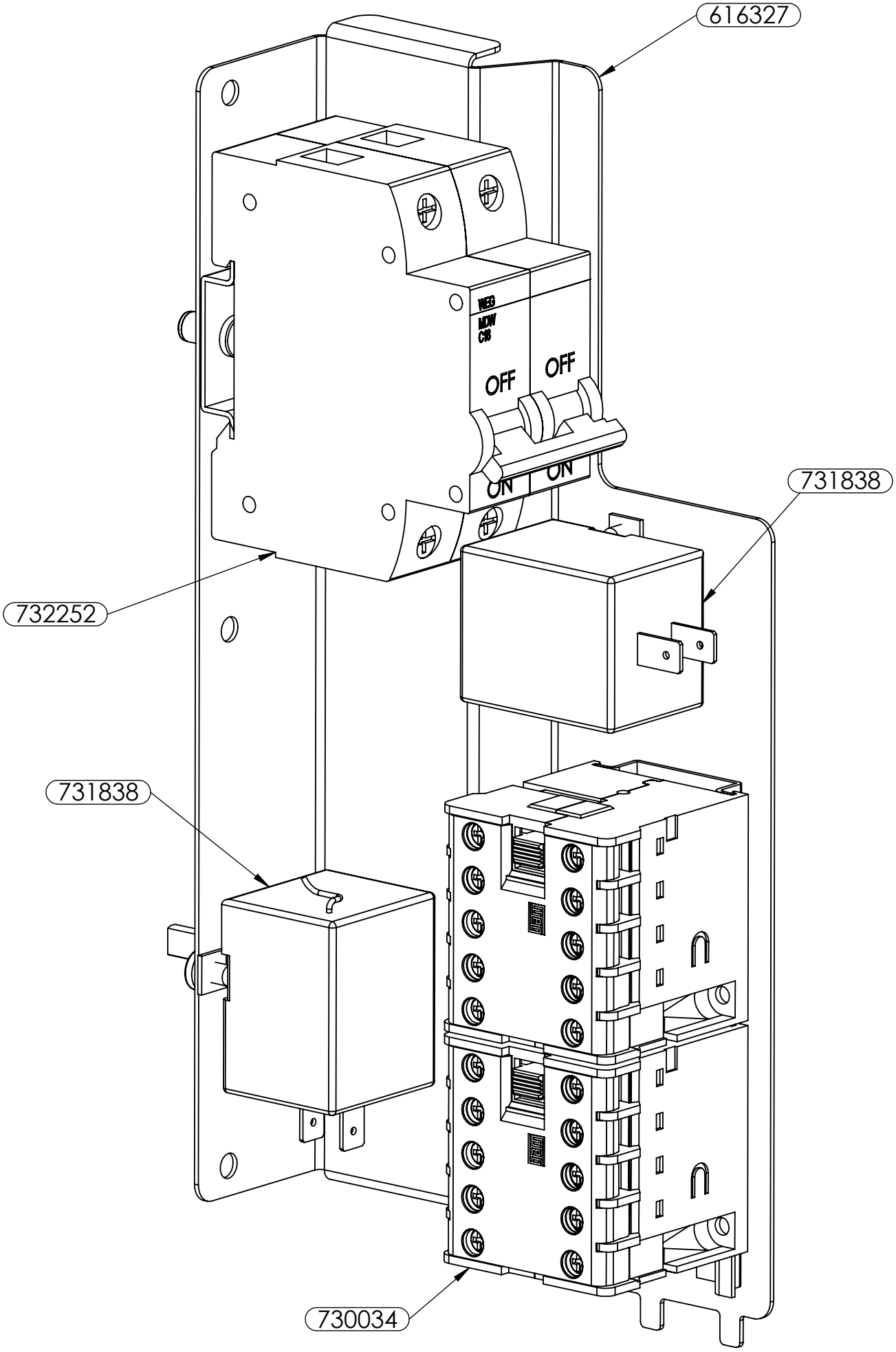

Review 11/26/18

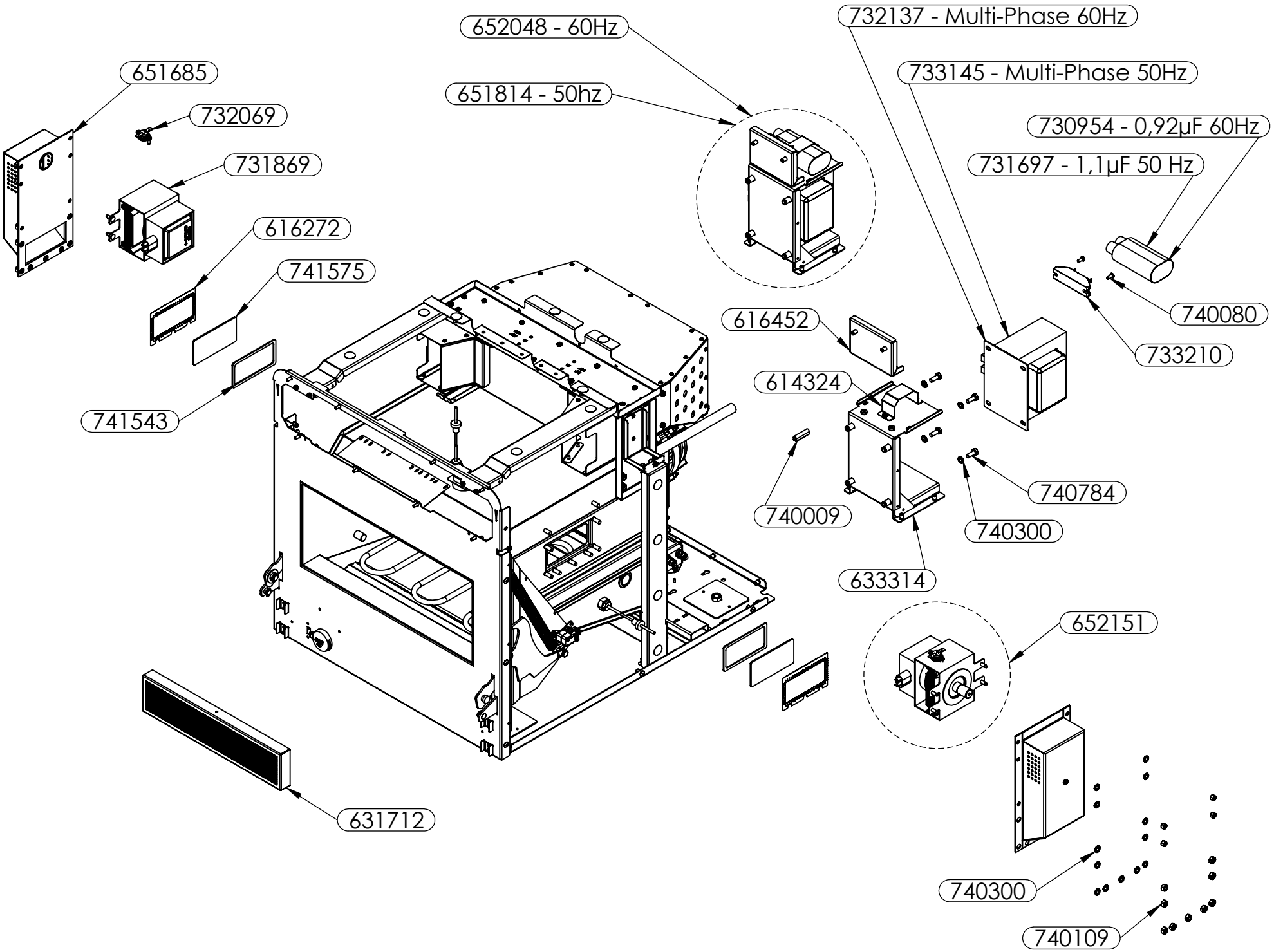

Review 11/22/18